COUNTER 301 @ 100%

- Graphic image/logo safe site area
- Removable Graphic image area
- Full Bleed area 40mm
- Non printable area
- Allow for fold on top side of panel 1mm gap

HEADER

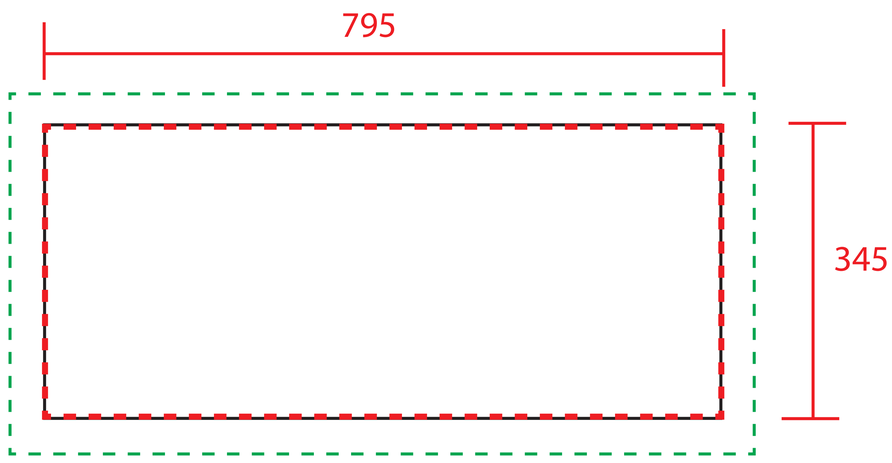

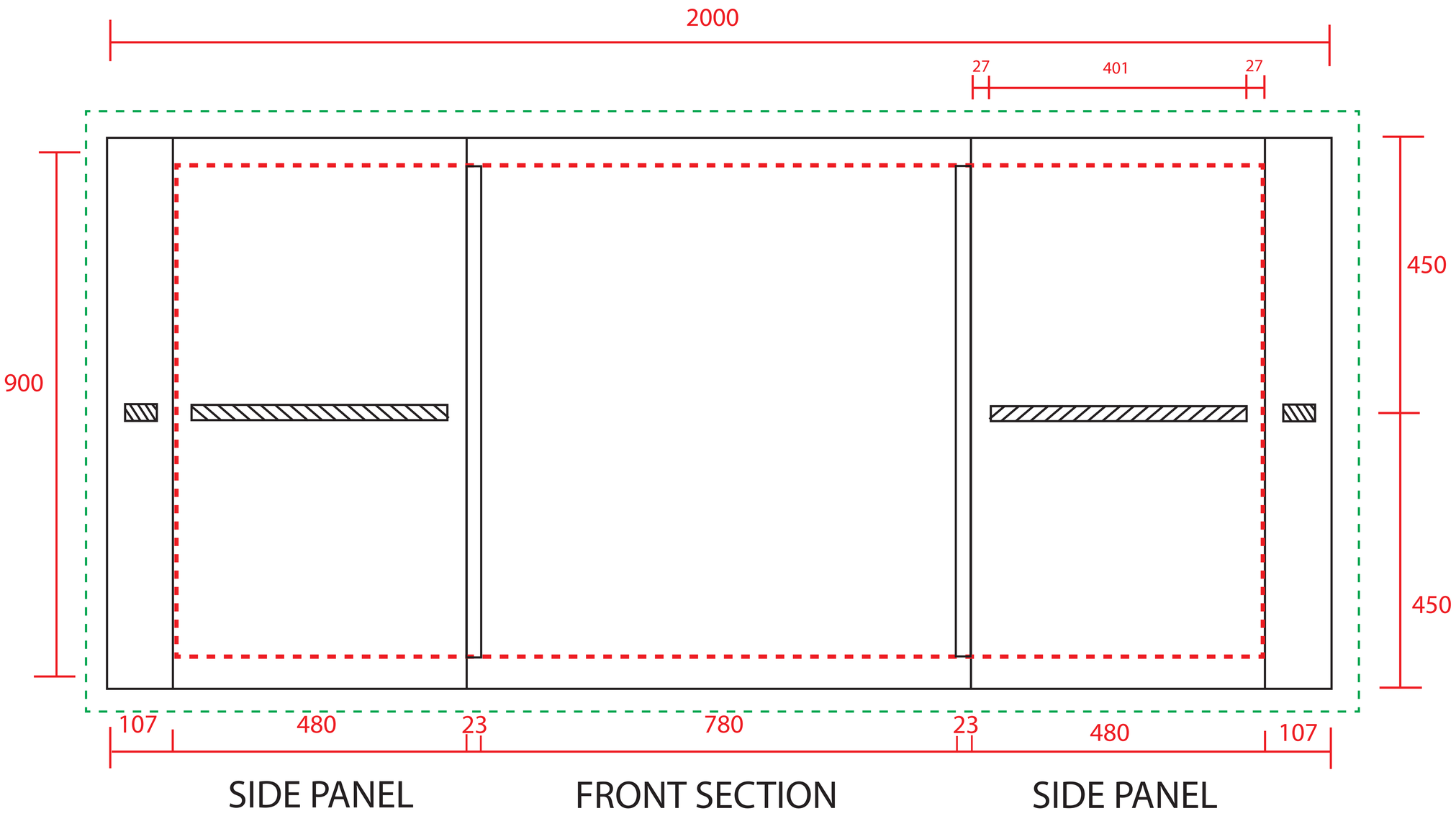
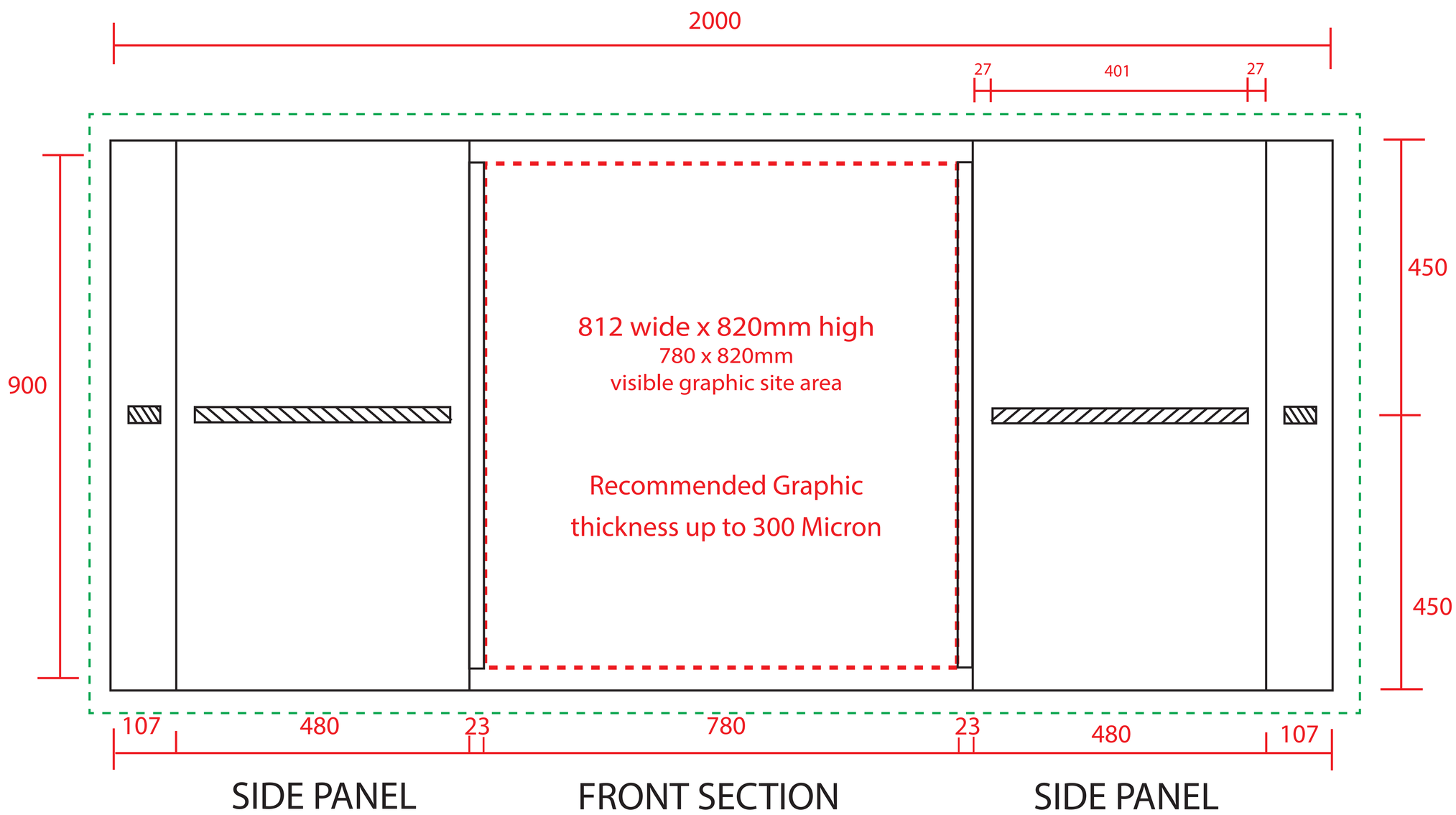
REMOVABLE GRAPHIC TEMPLATE